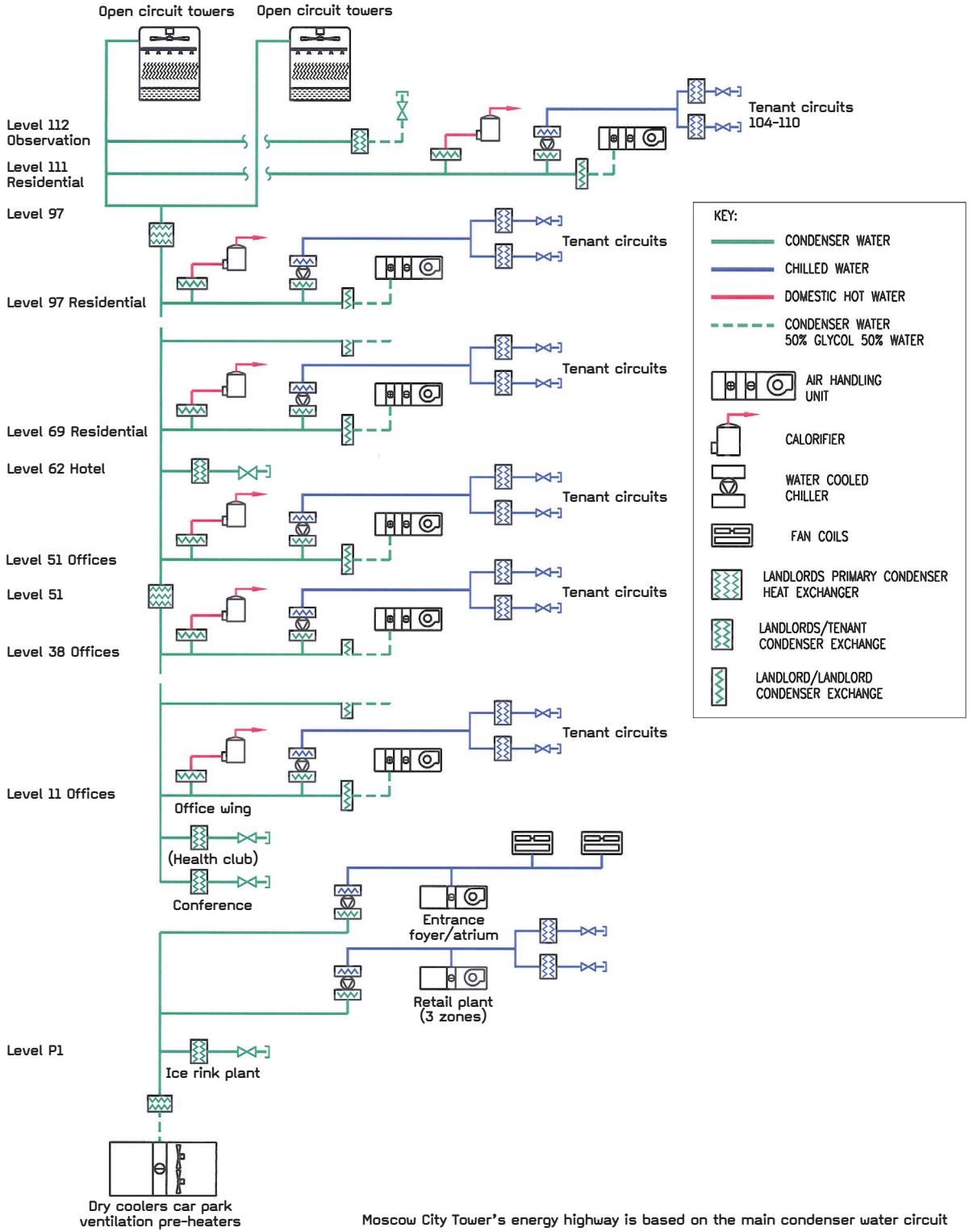

Moscow City Tower's energy highway is based on the main condenser water circuit